Ravi Honda

INTRODUCING

Dio 125

X-EDITION

RIDE YOUR XCLUSIVE

Introducing the Honda Dio 125 X-Edition - a sharper take on the iconic Dio with bold new design elements. Dio 125 X-Edition is built to make every ride exciting and effortless.

**The Dio 125 X- Edition is available in Deluxe variant only.*

STYLE

ALL-NEW STYLISH & DYNAMIC GRAPHICS

Bold, youthful graphics bring motion and attitude to the Dio 125 X-Edition. Designed to command attention, these striking visuals give the scooter a strong street presence—standing out confidently in traffic and at every stop.

X-EDITION DECALS

Exclusive X-Edition decals reinforce the scooter's distinct identity, signalling a more aggressive and contemporary character.

DUAL COLOUR BODY

The dual-tone body treatment enhances the scooter's sporty appeal, adding depth and contrast that elevates its premium, modern look.

ALLOY WHEELS: WHEELS THAT TURN HEADS

The all new Mat Frash alloy wheels not only enhance visual impact but also improve balance and durability. Designed for confidence, they complement both city rides and daily commutes.

LED HEADLAMP & POSITION LAMP

For trendsetters who own the night, the sleek LED lights provide a bright, clear view of the road ahead. And the distinctive LED lamp enhances the bold look while adding a touch of flair to your style.

LED TAIL LAMP

The sleek LED tail lamp completes the dynamic rear styling while improving visibility for added safety.

SPLIT GRABRAIL

A bold, sleek grabrail that grabs attention from the first glance onwards.

MUFFLER

A thunderous sound for a thunderous entry. Dio 125's dual-tip muffler announces your arrival before you even arrive.

TECHNOLOGY

TFT SCREEN DISPLAY

The TFT meter delivers crisp visuals and clear ride information at a glance. Designed for modern riders, it keeps you informed, connected, and in control at all times.

FUEL EFFICIENCY INTELLIGENCE

- *Live Mileage Indicator*
- *Average Mileage*
- *Distance to Empty*
- *Eco Indicator*

ADVANCED IDLING STOP SYSTEM (AISS)

Advanced Idling Stop System Engine automatically comes to a stop whenever the Dio 125 is under 21 Kmph, saving extra fuel in heavy traffic.

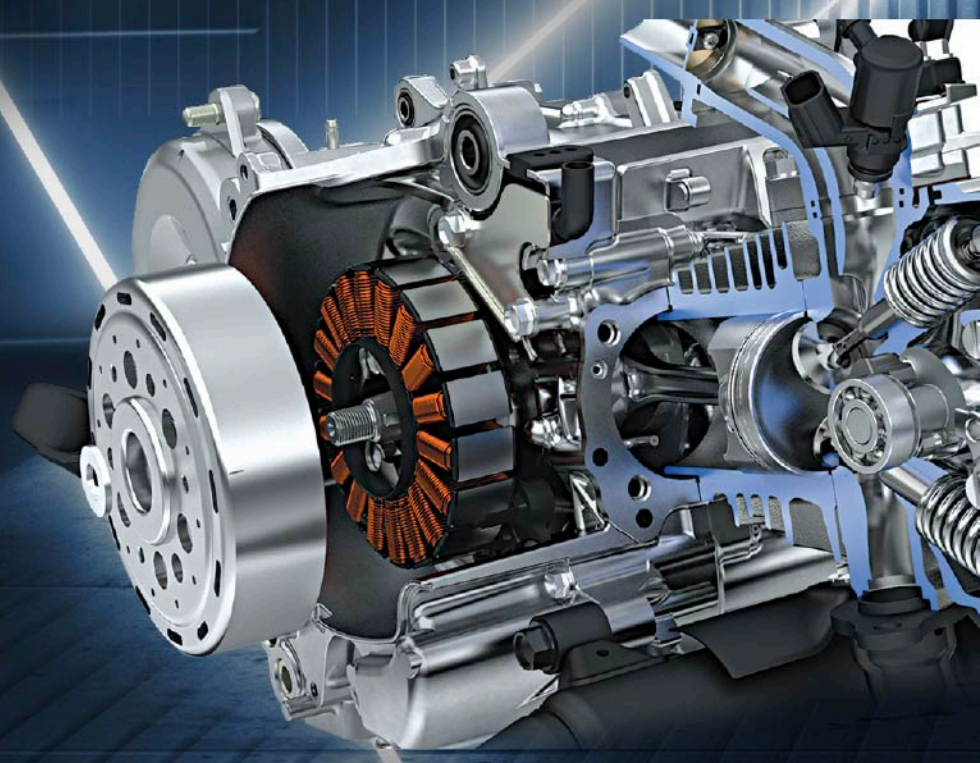

POWERFUL 125cc ENGINE

Top-tier power and acceleration to make rides exciting.

PGM-FI
FUEL INJECTION

The PGM-FI system optimizes fuel and air for efficient combustion, ensuring steady power and better mileage.

SILENT START WITH ACG

The ACG Starter provides a smooth, silent start every time, and reduces engine maintenance.

RELIABILITY & COMFORT

OPEN GLOVE BOX

An open glove box that's amazingly spacious. So, whether it's your sipper or sunglasses, keep all your essentials close.

USB TYPE-C CHARGING PORT

With the built-in USB Type-C charger, never ever worry about your phone's battery running out.

DOUBLE LID EXTERNAL FUEL FILL

Now no need to get up to get your Dio refilled with a double-lid external fuel fill.

PASSING SWITCH

Pass like a boss with an easy-to-use passing switch for high beam, low beam, and passing with a flick.

SAFETY

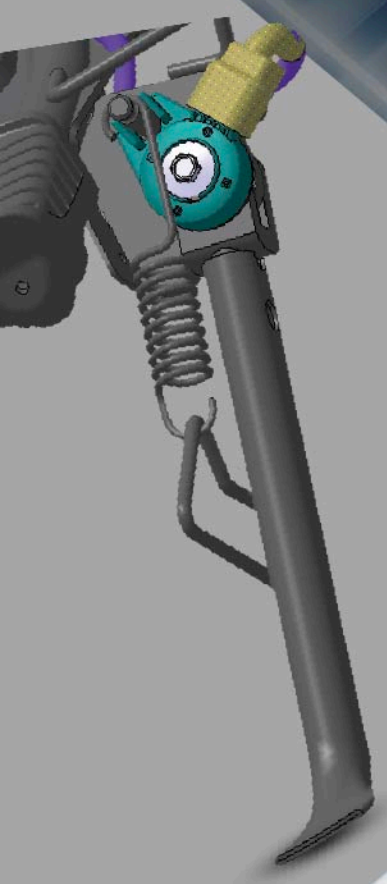

SIDE STAND ENGINE CUT-OFF

It automatically shuts off the engine for added safety when the side stand is engaged.

TELESCOPIC FRONT SUSPENSION

Say goodbye to bumpy rides! Our telescopic suspension features dual hydraulic shock absorbers with internal coil springs, designed for minimum vibrations, maximum comfort.

FRONT DISC BRAKE

High-performance disc brakes fitted in sleek alloy wheels, perfect for those who like to stay stylishly in command.

TECHNICAL SPECIFICATIONS

Body Dimensions

Length	1830 mm
Width	707 mm
Height	1172 mm
Wheel base	1260 mm
Ground clearance	171 mm
Seat Length	708 mm
Kerb weight	105kg (X edition)
Fuel tank capacity	5.3L

Engine

Type	4 Stroke, SI Engine
Displacement	123.92cc
Max net power	6.11 kW @6500rpm
Max net torque	10.5 N-m @5000rpm
Bore	50
Stroke	63.113
Fuel System	PGM-FI
Compression ratio	10.0:1
Air filter type	Viscous Paper Filter
Starting method	Self

Transmission

Clutch Type	Automatic Centrifugal Clutch
	Dry Type

Tyres & Brakes

Tyre Size & Type (Front)	90/90-12 54J Tubeless
Tyre Size & Type (Rear)	90/100-10 53J Tubeless
Brake Type & Size (Front)	Disc- 190mm
Brake Type & Size (Rear)	Drum- 130mm

Frame & Suspension

Frame Type	Underbone
Front Suspension	Telescopic
Rear Suspension	3-Step Adjustable Spring Loaded
	Hydraulic

Electricals

System Voltage	12V
Battery	5.0Ah
Head lamp	LED

+The technical specifications and design of the vehicle may vary according to the requirements and conditions without any notice • Dio 125 meets Bharat Stage VI norms • Product shown in the picture may vary from actual product available in the market • Accessories shown in the picture are not part of standard equipment. Conditions apply.

Ravi Honda
RAVI WHEELS PRIVATE LIMITED Apsara Skyline, Pratap Nagar
Vadodara
Tel: 7043630001/02
Mob: 9512122777 8866336949